UNIVERSITY OF CAMBRIDGE INTERNATIONAL EXAMINATIONS
General Certificate of Education
Advanced Subsidiary Level and Advanced Level

PHYSICS **9702/11**

Paper 1 Multiple Choice **May/June 2011**

1 hour

Additional Materials: Multiple Choice Answer Sheet
Soft clean eraser
Soft pencil (type B or HB is recommended)

4675180455

READ THESE INSTRUCTIONS FIRST

Write in soft pencil.
Do not use staples, paper clips, highlighters, glue or correction fluid.
Write your name, Centre number and candidate number on the Answer Sheet in the spaces provided unless this has been done for you.

There are **forty** questions on this paper. Answer **all** questions. For each question there are four possible answers **A**, **B**, **C** and **D**.
Choose the **one** you consider correct and record your choice in **soft pencil** on the separate Answer Sheet.

Read the instructions on the Answer Sheet very carefully.

Each correct answer will score one mark. A mark will not be deducted for a wrong answer.
Any working should be done in this booklet.

IB11 06_9702_11/7RP
© UCLES 2011

Data

speed of light in free space,	$c = 3.00 \times 10^{8}\,\text{m s}^{-1}$
permeability of free space,	$\mu_0 = 4\pi \times 10^{-7}\,\text{H m}^{-1}$
permittivity of free space,	$\varepsilon_0 = 8.85 \times 10^{-12}\,\text{F m}^{-1}$
elementary charge,	$e = 1.60 \times 10^{-19}\,\text{C}$
the Planck constant,	$h = 6.63 \times 10^{-34}\,\text{J s}$
unified atomic mass constant,	$u = 1.66 \times 10^{-27}\,\text{kg}$
rest mass of electron,	$m_\text{e} = 9.11 \times 10^{-31}\,\text{kg}$
rest mass of proton,	$m_\text{p} = 1.67 \times 10^{-27}\,\text{kg}$
molar gas constant,	$R = 8.31\,\text{J K}^{-1}\,\text{mol}^{-1}$
the Avogadro constant,	$N_\text{A} = 6.02 \times 10^{23}\,\text{mol}^{-1}$
the Boltzmann constant,	$k = 1.38 \times 10^{-23}\,\text{J K}^{-1}$
gravitational constant,	$G = 6.67 \times 10^{-11}\,\text{N m}^2\,\text{kg}^{-2}$
acceleration of free fall,	$g = 9.81\,\text{m s}^{-2}$

© UCLES 2011

Formulae

uniformly accelerated motion, $s = ut + \frac{1}{2}at^2$

$v^2 = u^2 + 2as$

work done on/by a gas, $W = p\Delta V$

gravitational potential, $\phi = -\frac{Gm}{r}$

hydrostatic pressure, $p = \rho gh$

pressure of an ideal gas, $p = \frac{1}{3}\frac{Nm}{V}\langle c^2 \rangle$

simple harmonic motion, $a = -\omega^2 x$

velocity of particle in s.h.m., $v = v_0 \cos \omega t$

$v = \pm \omega \sqrt{x_0^2 - x^2}$

electric potential, $V = \frac{Q}{4\pi\varepsilon_0 r}$

capacitors in series, $1/C = 1/C_1 + 1/C_2 + \ldots$

capacitors in parallel, $C = C_1 + C_2 + \ldots$

energy of charged capacitor, $W = \frac{1}{2}QV$

resistors in series, $R = R_1 + R_2 + \ldots$

resistors in parallel, $1/R = 1/R_1 + 1/R_2 + \ldots$

alternating current/voltage, $x = x_0 \sin \omega t$

radioactive decay, $x = x_0 \exp(-\lambda t)$

decay constant, $\lambda = \frac{0.693}{t_{\frac{1}{2}}}$

© UCLES 2011

1 Decimal sub-multiples and multiples of units are indicated using a prefix to the unit. For example, the prefix milli (m) represents 10^{-3}.

Which row gives the sub-multiples or multiples represented by pico (p) and giga (G)?

	pico (p)	giga (G)
A	10^{-9}	10^{9}
B	10^{-9}	10^{12}
C	10^{-12}	10^{9}
D	10^{-12}	10^{12}

2 Which definition is correct and uses only quantities rather than units?

A Density is mass per cubic metre.

B Potential difference is energy per unit current.

C Pressure is force per unit area.

D Speed is distance travelled per second.

3 A force of 5.0 N pushes a ball due north and another force of 3.0 N pushes it due east.

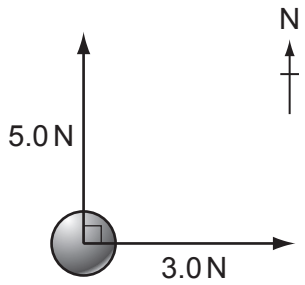

What is the magnitude of the net force acting on the ball?

A 2.8 N **B** 4.0 N **C** 5.8 N **D** 8.0 N

Space for working

4 The diagram shows a trace of a wave on a cathode-ray oscilloscope.

The vertical and horizontal gridlines have a spacing of 1.0 cm. The voltage scaling is 4 V cm^{-1} and the time scaling is 5 ms cm^{-1}.

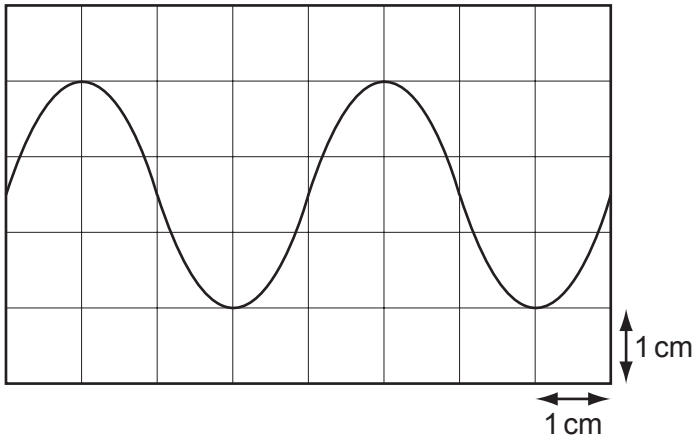

What are the amplitude and period of the wave?

	amplitude / V	period / ms
A	1.5	4
B	5.0	10
C	6.0	20
D	12.0	20

Space for working

5 The diagram shows an experiment to measure the speed of a small ball falling at constant speed through a clear liquid in a glass tube.

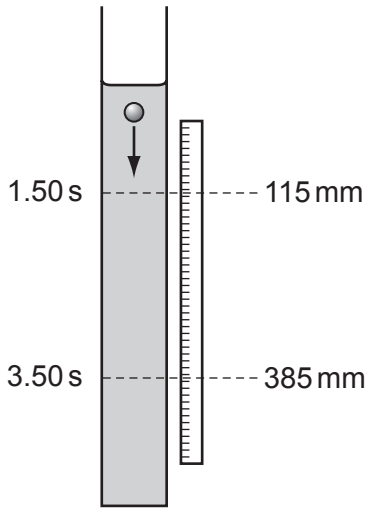

There are two marks on the tube. The top mark is positioned at 115 ± 1 mm on the adjacent rule and the lower mark at 385 ± 1 mm. The ball passes the top mark at 1.50 ± 0.02 s and passes the lower mark at 3.50 ± 0.02 s.

The constant speed of the ball is calculated by $\frac{385-115}{3.50-1.50} = \frac{270}{2.00} = 135\,\text{mm}\,\text{s}^{-1}$.

Which expression calculates the fractional uncertainty in the value of this speed?

A $\frac{2}{270} + \frac{0.04}{2.00}$

B $\frac{2}{270} - \frac{0.04}{2.00}$

C $\frac{1}{270} \times \frac{0.02}{2.00}$

D $\frac{1}{270} \div \frac{0.02}{2.00}$

Space for working

© UCLES 2011

6 The graph shows how the acceleration of an object moving in a straight line varies with time.

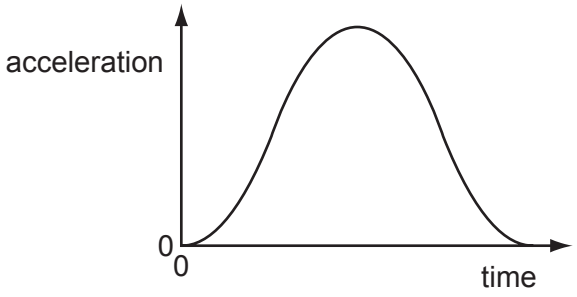

Which graph shows the variation with time of the velocity of the object?

A

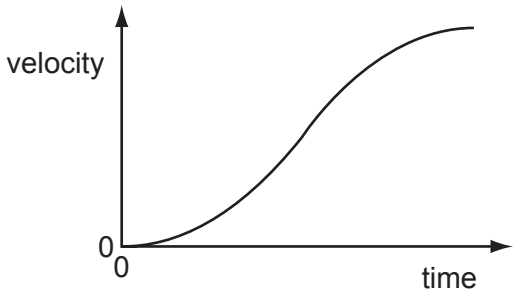

B

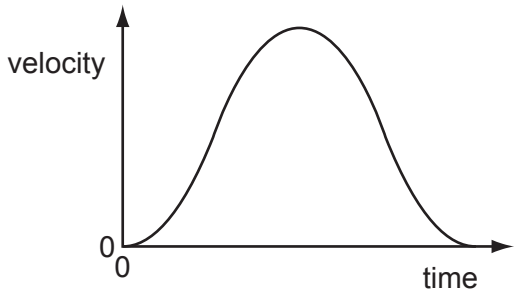

C

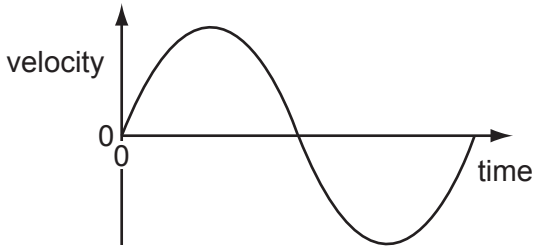

D

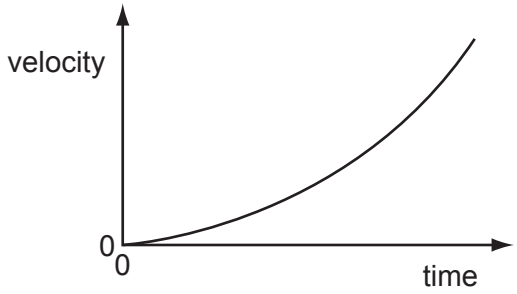

Space for working

7 A ball is released from rest at time zero. After 1.0 s it bounces inelastically from a horizontal surface and rebounds, reaching the top of its first bounce after 1.5 s.

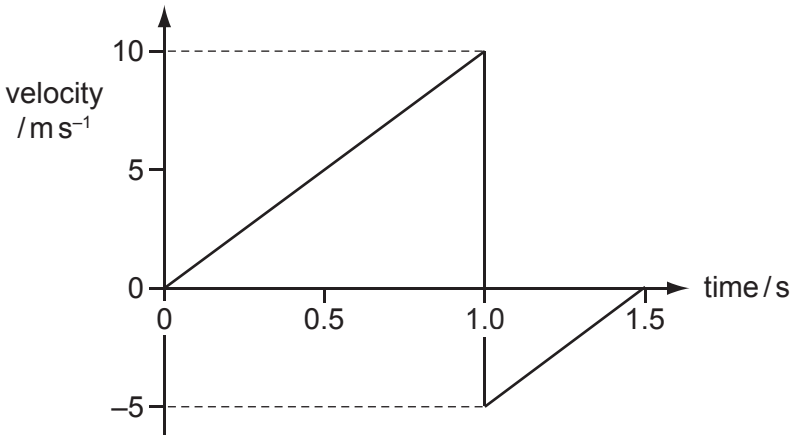

What is the total displacement of the ball from its original position after 1.5 s?

A 1.25 m **B** 3.75 m **C** 5.00 m **D** 6.25 m

Space for working

© UCLES 2011

8 A body has a weight of 58.9 N when on the Earth. On the Moon, the acceleration of free fall is $1.64\,m\,s^{-2}$.

What are the weight and the mass of the body when it is on the Moon?

	weight / N	mass / kg
A	9.85	1.00
B	9.85	6.00
C	58.9	1.00
D	58.9	6.00

9 A body of mass m, moving at velocity v, collides with a stationary body of the same mass and sticks to it.

Which row describes the momentum and kinetic energy of the two bodies after the collision?

	momentum	kinetic energy
A	mv	$\frac{1}{4}mv^2$
B	mv	$\frac{1}{8}mv^2$
C	$2mv$	$\frac{1}{2}mv^2$
D	$2mv$	mv^2

Space for working

© UCLES 2011

10 A molecule of mass m travelling horizontally with velocity u hits a vertical wall at right-angles to its velocity. It then rebounds horizontally with the same speed.

What is its change in momentum?

A zero **B** mu **C** $-mu$ **D** $-2mu$

11 A cable car of weight W hangs in equilibrium from its cable at point P.

The cable has tensions T_1 and T_2 as shown.

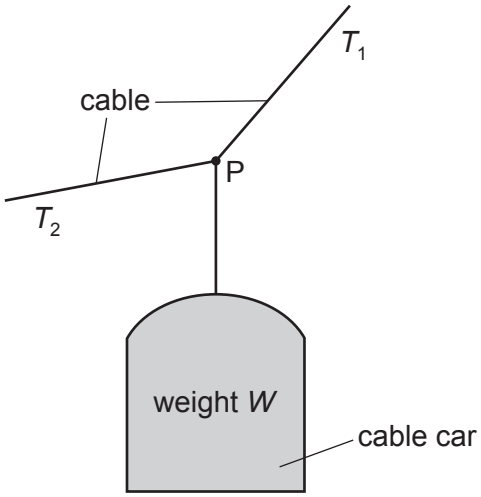

Which diagram correctly represents the forces acting at point P?

A

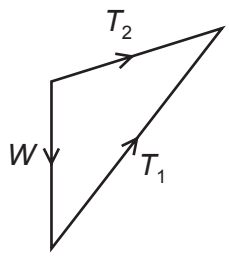

B

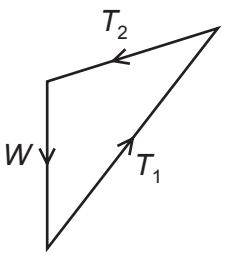

C

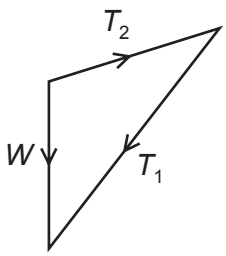

D

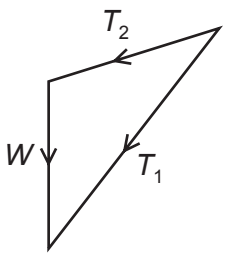

Space for working

12 The diagram shows four forces applied to a circular object.

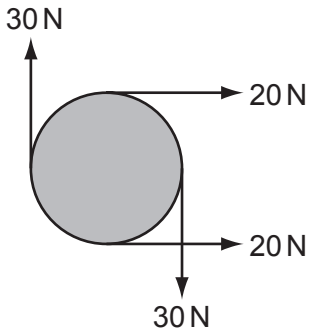

Which row describes the resultant force and resultant torque on the object?

	resultant force	resultant torque
A	zero	zero
B	zero	non-zero
C	non-zero	zero
D	non-zero	non-zero

Space for working

13 A uniform metre rule of mass 100 g is supported by a pivot at the 40 cm mark and a string at the 100 cm mark. The string passes round a frictionless pulley and carries a mass of 20 g as shown in the diagram.

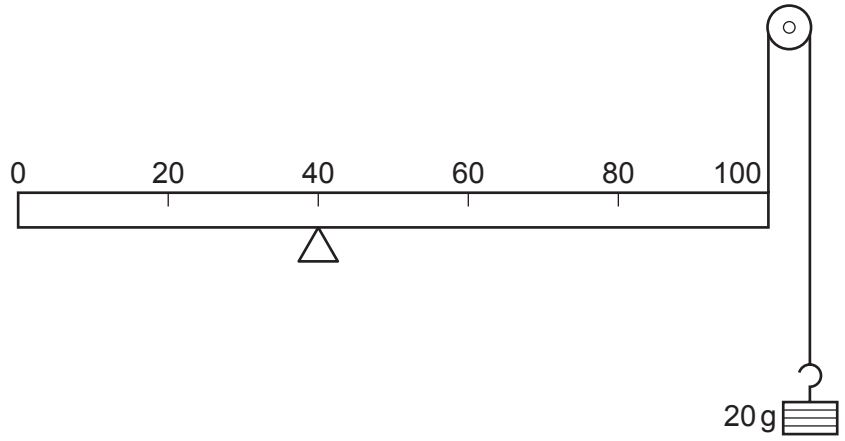

At which mark on the rule must a 50 g mass be suspended so that the rule balances?

A 4 cm **B** 36 cm **C** 44 cm **D** 64 cm

14 A steel sphere is dropped vertically onto a horizontal metal plate. The sphere hits the plate with a speed u, leaves it at a speed v, and rebounds vertically to half of its original height.

Which expression gives the value of $\frac{v}{u}$?

A $\frac{1}{2^2}$ **B** $\frac{1}{2}$ **C** $\frac{1}{\sqrt{2}}$ **D** $1 - \frac{1}{\sqrt{2}}$

Space for working

© UCLES 2011

15 A block of mass 2.0 kg is released from rest on a slope. It travels 7.0 m down the slope and falls a vertical distance of 3.0 m. The block experiences a frictional force parallel to the slope of 5.0 N.

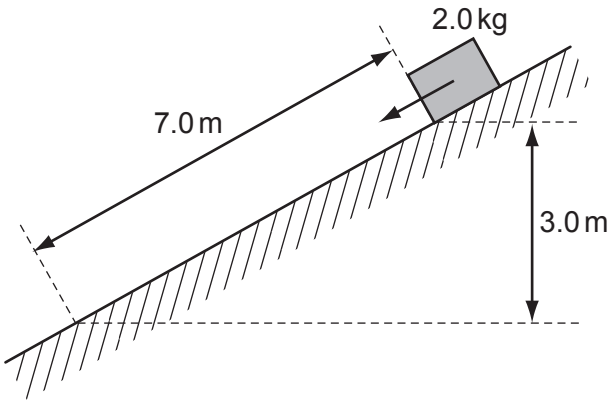

What is the speed of the block after falling this distance?

A 4.9 m s^{-1} **B** 6.6 m s^{-1} **C** 8.6 m s^{-1} **D** 10.1 m s^{-1}

16 A man has a mass of 80 kg. He ties himself to one end of a rope which passes over a single fixed pulley. He pulls on the other end of the rope to lift himself up at an average speed of 50 cm s^{-1}.

What is the average useful power at which he is working?

A 40 W **B** 0.39 kW **C** 4.0 kW **D** 39 kW

Space for working

17 A body travelling with a speed of $10\,m\,s^{-1}$ has kinetic energy 1500 J.

If the speed of the body is increased to $40\,m\,s^{-1}$, what is its new kinetic energy?

A 4500 J **B** 6000 J **C** 24 000 J **D** 1 350 000 J

18 Which process does **not** require energy to be supplied?

A boiling

B evaporation

C freezing

D melting

19 1.5 m^3 of water is mixed with 0.50 m^3 of alcohol. The density of water is 1000 $kg\,m^{-3}$ and the density of alcohol is $800\,kg\,m^{-3}$.

What is the density of the mixture with volume $2.0\,m^3$?

A $850\,kg\,m^{-3}$ **B** $900\,kg\,m^{-3}$ **C** $940\,kg\,m^{-3}$ **D** $950\,kg\,m^{-3}$

Space for working

© UCLES 2011

20 A long, thin metal wire is suspended from a fixed support and hangs vertically. Masses are suspended from its lower end.

The load on the lower end is increased from zero and then decreased again back to zero.

The diagram shows the force-extension graph produced.

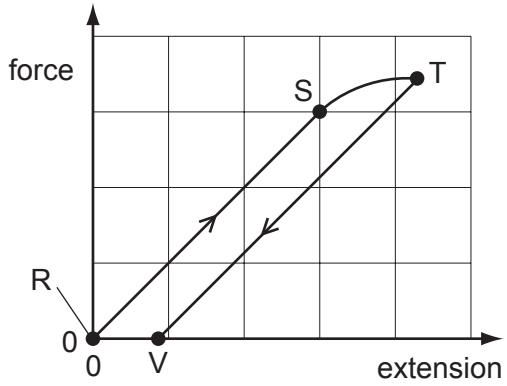

Where on the graph would the elastic limit be found?

A anywhere between point R and point S

B beyond point S but before point T

C exactly at point S

D exactly at point T

Space for working

21 The Young modulus E can be determined from measurements made when a wire is stretched.

Which quantities would be measured in order to determine E?

A	mass of stretching load	original length of wire	diameter of wire	extension of wire
B	mass of stretching load	new length of wire	cross-sectional area of wire	diameter of wire
C	mass of wire	original length of wire	cross-sectional area of wire	new length of wire
D	mass of wire	new length of wire	diameter of wire	extension of wire

Space for working

© UCLES 2011

22 The four graphs represent a progressive wave on a stretched string. Graphs **A** and **B** show how the displacement *d* varies with distance *x* along the string at one instant. Graphs **C** and **D** show how the displacement *d* varies with time *t* at a particular value of *x*.

The labels on the graphs are intended to show the wavelength λ, the period *T* and the amplitude *a* of the wave, but only one graph is correctly labelled.

Which graph is correctly labelled?

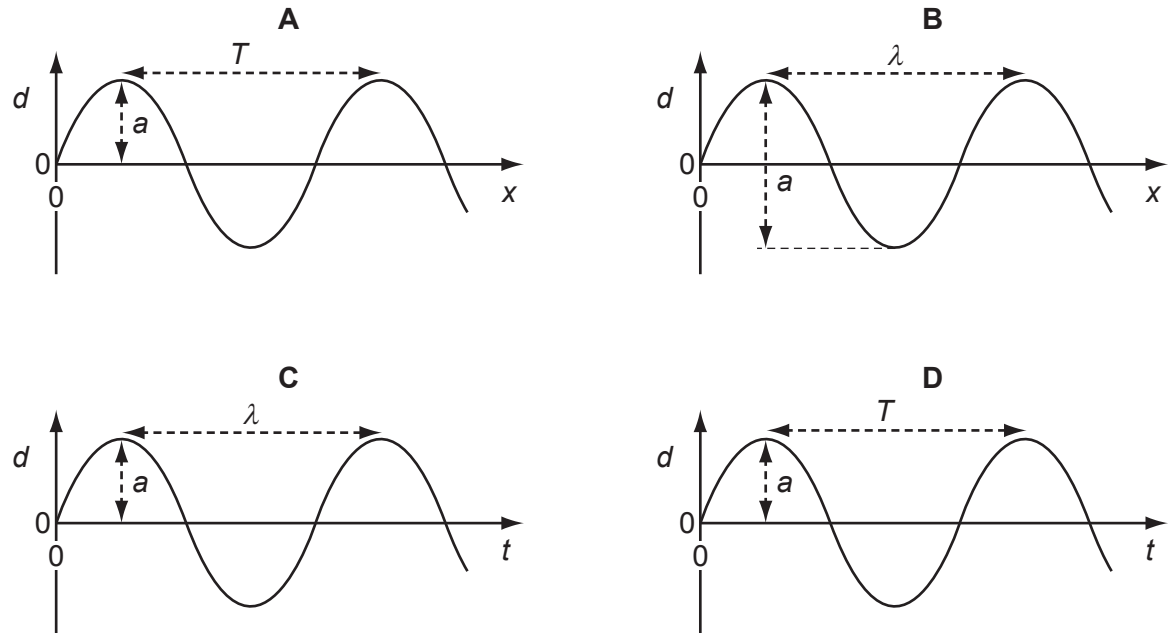

Space for working

23 Which statement about sound waves in air at constant temperature is correct?

A Amplitude is inversely proportional to velocity.

B Frequency is inversely proportional to wavelength.

C Velocity is proportional to wavelength.

D Wavelength is proportional to amplitude.

24 A source of sound of constant power P is situated in an open space. The intensity I of sound at distance r from this source is given by

$$I = \frac{P}{4\pi r^2}.$$

How does the amplitude a of the vibrating air molecules vary with the distance r from the source?

A $a \propto \frac{1}{r}$ **B** $a \propto \frac{1}{r^2}$ **C** $a \propto r$ **D** $a \propto r^2$

Space for working

25 The basic principle of note production in a horn is to set up a stationary wave in an air column.

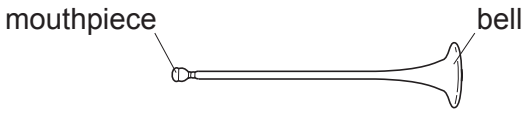

horn

For the lowest note produced by a horn, a node is formed at the mouthpiece and the antinode is formed at the bell. The frequency of this note is 75 Hz.

What are the frequencies of the next two higher notes for this air column?

	first higher note / Hz	second higher note / Hz
A	113	150
B	150	225
C	150	300
D	225	375

26 Which electromagnetic wave phenomenon is needed to explain the spectrum produced when white light falls on a diffraction grating?

A coherence

B interference

C polarisation

D refraction

Space for working

27 A diffraction grating with 500 lines per mm is used to observe diffraction of monochromatic light of wavelength 600 nm.

The light is passed through a narrow slit and the grating is placed so that its lines are parallel to the slit. Light passes through the slit and then the grating.

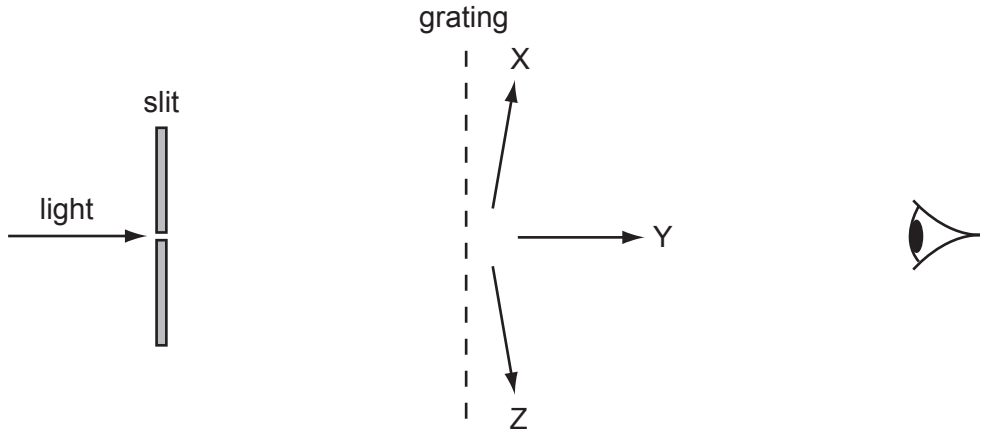

An observer views the slit through the grating at different angles, moving his head from X parallel to the grating, through Y, opposite the slit, to Z parallel to the grating on the opposite side.

How many images of the slit does he see?

A 3 **B** 4 **C** 6 **D** 7

Space for working

© UCLES 2011

28 A potential difference is applied between two metal plates that are **not** parallel.

Which diagram shows the electric field between the plates?

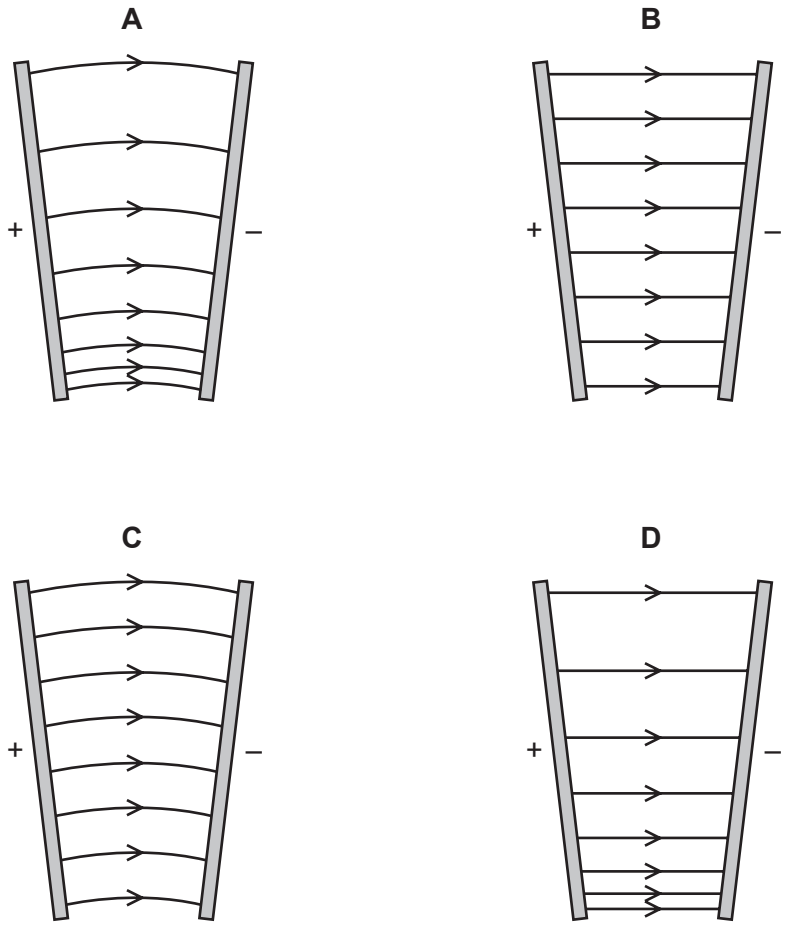

Space for working

29 The diagram shows a charged particle as it approaches a pair of charged parallel plates in a vacuum.

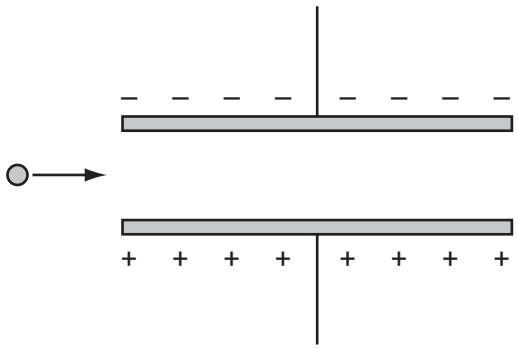

Which row describes the horizontal and vertical components of its motion as it travels between the plates?

	horizontal component	vertical component
A	constant acceleration	constant acceleration
B	constant acceleration	constant velocity
C	constant velocity	constant acceleration
D	constant velocity	constant velocity

30 Two parallel plates, a distance 25 mm apart, have a potential difference between them of 12 kV.

What is the force on an electron when it is in the uniform electric field between the plates?

A 4.8×10^{-20} N

B 7.7×10^{-20} N

C 4.8×10^{-17} N

D 7.7×10^{-14} N

Space for working

© UCLES 2011

31 A copper wire of cross-sectional area 2.0 mm^2 carries a current of 10 A.

How many electrons pass through a given cross-section of the wire in one second?

A 1.0×10^1 **B** 5.0×10^6 **C** 6.3×10^{19} **D** 3.1×10^{25}

32 A battery is marked 9.0 V.

What does this mean?

A Each coulomb of charge from the battery supplies 9.0 J of electrical energy to the whole circuit.

B The battery supplies 9.0 J to an external circuit for each coulomb of charge.

C The potential difference across any component connected to the battery will be 9.0 V.

D There will always be 9.0 V across the battery terminals.

Space for working

33 The graphs show possible current-voltage (I-V) relationships for a filament lamp and for a semiconductor diode.

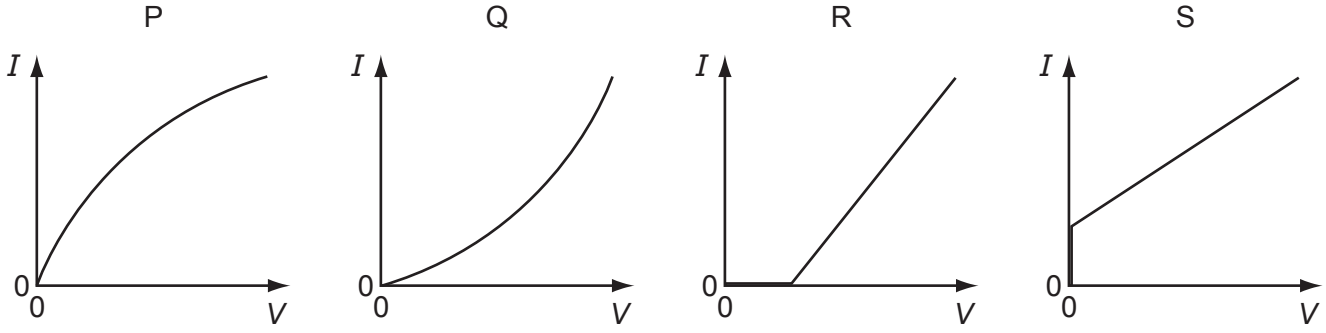

Which row best specifies the correct I-V graphs for the lamp and the diode?

	filament lamp	semiconductor diode
A	P	R
B	P	S
C	Q	R
D	Q	S

Space for working

34 The resistance of a metal cube is measured by placing it between two parallel plates, as shown.

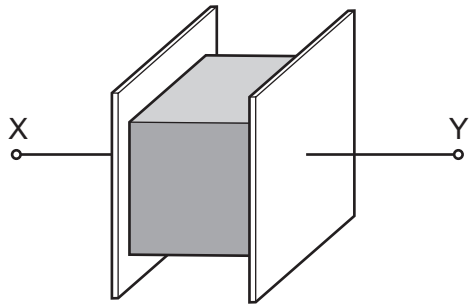

The cube has volume V and is made of a material with resistivity ρ. The connections to the cube have negligible resistance.

Which expression gives the electrical resistance of the metal cube between X and Y?

A $\rho V^{\frac{1}{3}}$ **B** $\rho V^{\frac{2}{3}}$ **C** $\dfrac{\rho}{V^{\frac{1}{3}}}$ **D** $\dfrac{\rho}{V^{\frac{2}{3}}}$

35 The diagram shows part of a current-carrying circuit. The ammeter has negligible internal resistance.

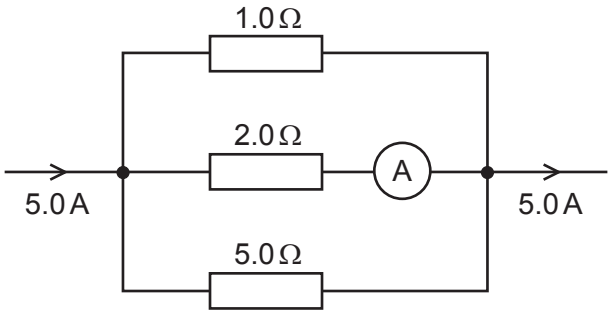

What is the reading on the ammeter?

A 0.7 A **B** 1.3 A **C** 1.5 A **D** 1.7 A

Space for working

36 Four resistors of equal value are connected as shown.

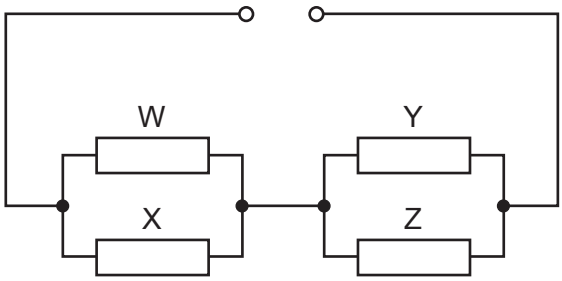

How will the powers to the resistors change when resistor W is removed?

A The powers to X, Y and Z will all increase.

B The power to X will decrease and the powers to Y and Z will increase.

C The power to X will increase and the powers to Y and Z will decrease.

D The power to X will increase and the powers to Y and Z will remain unaltered.

Space for working

© UCLES 2011

37 In the circuit shown, XY is a length *L* of uniform resistance wire. R_1 and R_2 are unknown resistors. J is a sliding contact that joins the junction of R_1 and R_2 to points on XY through a small signal lamp S.

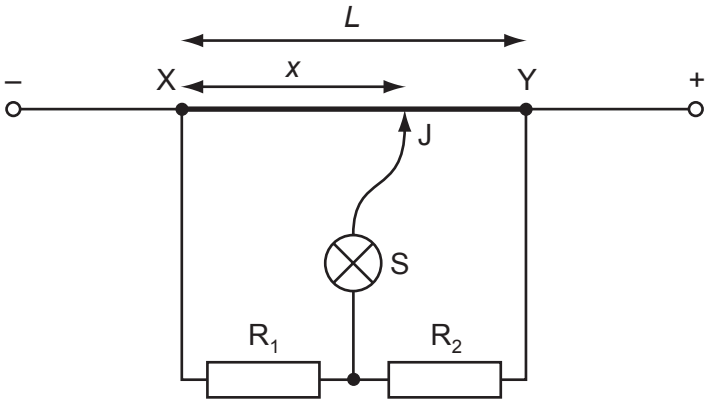

To determine the ratio $\frac{V_1}{V_2}$ of the potential differences across R_1 and R_2, a point is found on XY at which the lamp is off. This point is at a distance *x* from X.

What is the value of the ratio $\frac{V_1}{V_2}$?

A $\frac{L}{x}$ **B** $\frac{x}{L}$ **C** $\frac{L-x}{x}$ **D** $\frac{x}{L-x}$

38 The first artificial radioactive substance was made by bombarding aluminium, $^{27}_{13}Al$, with α-particles. This produced an unstable isotope of phosphorus, $^{30}_{15}P$.

What was the by-product of this reaction?

A an α-particle

B a β-particle

C a γ-ray

D a neutron

Space for working

39 Uranium-238, $^{238}_{92}U$, decays by α-emission into a daughter product which in turn decays by β-emission into a grand-daughter product.

What is the grand-daughter product?

A $^{234}_{90}Th$ **B** $^{234}_{91}Pa$ **C** $^{234}_{92}U$ **D** $^{230}_{90}Th$

40 Which statement about nuclei is correct?

A Different isotopic nuclei have different proton numbers.

B For some nuclei, the nucleon number can be less than the proton number.

C In some nuclear processes, mass-energy is not conserved.

D Nucleon numbers of nuclei are unchanged by the emission of β-particles.

Space for working

Permission to reproduce items where third-party owned material protected by copyright is included has been sought and cleared where possible. Every reasonable effort has been made by the publisher (UCLES) to trace copyright holders, but if any items requiring clearance have unwittingly been included, the publisher will be pleased to make amends at the earliest possible opportunity.

University of Cambridge International Examinations is part of the Cambridge Assessment Group. Cambridge Assessment is the brand name of University of Cambridge Local Examinations Syndicate (UCLES), which is itself a department of the University of Cambridge.

© UCLES 2011